3.2

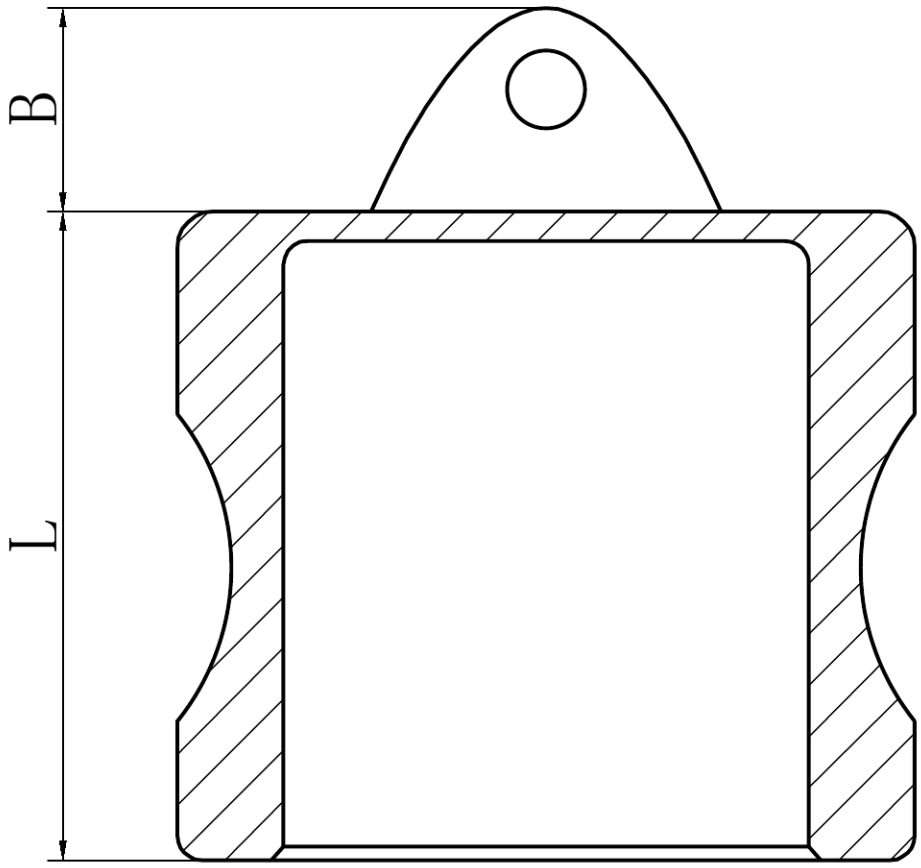

SIZE	Inch	1/2″	3/4″	1″	11/4″	11/2″	2″	2/12″	3″	4″	5″	6″
	mm	15.0	20.0	25.0	32.0	40.0	50.0	65.0	80.0	100.0	125.0	150.0
B		10.5	10.5	10.5	11.5	11.3	13.5	14.5	13.5	14.5	16.0	16.0
L		25.5	25.5	31.0	39.0	42.0	46.0	48.0	50.0	53.0	53.0	65.0

	0.5～3	＞3～6	＞6～30
	±0.1	±0.1	±0.2
	＞30～120	＞120～400	＞400～1000
	±0.3	±0.5	±0.8

BY-KC-DP

A/1

BY-K-001

1 1