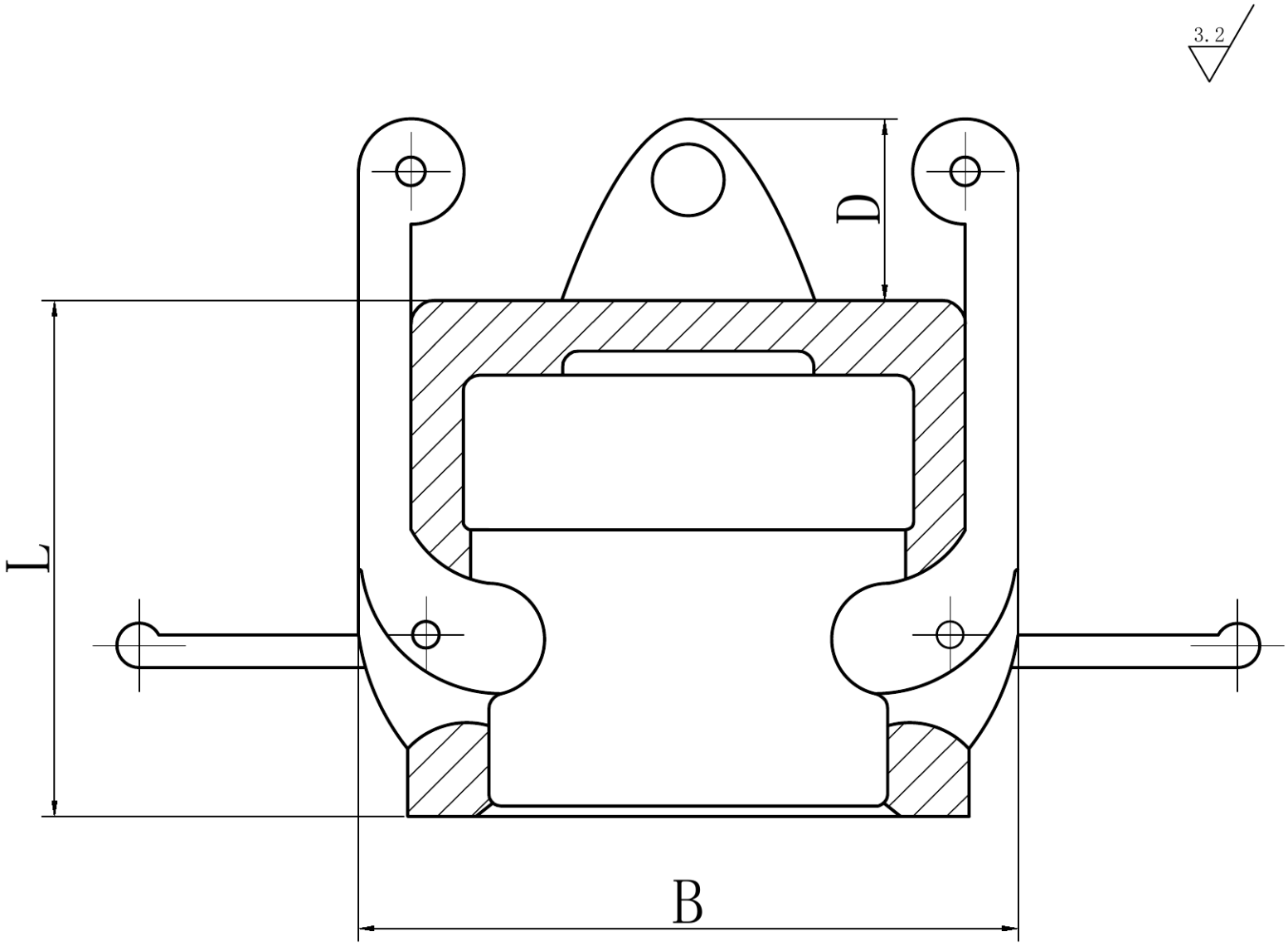

SIZE	Inch	1/2″	3/4″	1″	11/4″	11/2″	2″	2/12″	3″	4″	5″	6″
	mm	15.0	20.0	25.0	32.0	40.0	50.0	65.0	80.0	100.0	125.0	150.0
B		51.0	51.0	59.3	70.0	78.0	89.0	101.5	122.5	150.0	182.0	215.0
D		10.5	10.5	10.8	12.0	12.8	12.0	14.5	16.0	16.0	16.0	16.0
L		32.0	32.0	40.0	45.0	46.0	53.0	56.0	61.0	59.0	64.0	73.0

	0.5～3	＞3～6	＞6～30
	±0.1	±0.1	±0.2
	＞30～120	＞120～400	＞400～1000
	±0.3	±0.5	±0.8

BY-KC-DC

A/1

BY-K-001

1 1